36 Elliott Street 6-Unit Residential Development

Stormwater Management Report

Project Location:
36 Elliott Street
Cambridge, Ontario

Prepared For:
Sam Head, President
Dryden, Smith & Head
Planning Consultants Ltd.
54 Cedar Street North
Kitchener, Ontario

Prepared by:
GRIT Engineering Inc.
133 Regent Street
Stratford, Ontario

October 22, 2024

GRIT File No: GE23-0527-1-CIV-RPT-SWM-2024-10-22

PASSION, DETERMINATION, RESOLVE

Contents

1.0 Introduction 3

2.0 Design Requirements for Approval 3

3.0 Stormwater Management Design 3

- **3.1 Design Approach 3**
- **3.2 Pre-development Condition 4**
- **3.3 Post-Development Condition 4**
- **3.4 Quantity Control Summary 5**
- **3.5 Quality Control Summary 6**
- **3.6 Erosion & Sedimentation Control 6**

4.0 Salt Management 6

5.0 Conclusions 7

6.0 Statement of Conditions and Limitations 7

Appendices

Appendix A – Figures
Appendix B – Stormwater Management Calculations & Tempest Sizing and Brochure
Appendix C – Oil Grit Separator Summary

1.0 Introduction

GRIT Engineering Inc. (GRIT) was retained by Dryden, Smith & Head Planning Consultants Ltd. to provide the stormwater management design for the new residential development at 36 Elliott Street, to satisfy the site plan approval requirements set forth by the City of Cambridge.

The subject site is located at 36 Elliott Street, in Cambridge, Ontario and is approximately 0.10 hectares (ha) in size. The site is bounded by Elliott Street to the south, existing institutional (N2) to the east, low density residential (R4) to the west, and medium high density residential (RM3) to the north. Figure 1, located in Appendix A, provides an aerial image, illustrating the site location and surrounding characteristics.

This Stormwater Management (SWM) Report provides background and proposed design information to address the site plan approval (SPA) requirements for the property.

2.0 Design Requirements for Approval

The Site is located outside of the Grand River Conservation Authority (GRCA) Regulation Areas. The City of Cambridge has indicated that Stormwater Management quantity and quality controls are required for the site and are as follows:

- Control the post development peak flows to the existing conditions peak flows for the range of design storms.
- Post-development flows are to achieve, at a minimum, the MECP Enhanced quality control (80% suspended solids removal).

3.0 Stormwater Management Design

3.1 Design Approach

<u>Calculation Method</u>
Section 2.8.2 of the City of Cambridge Engineering Standards and Development Manual (ESDM) indicates that the Rational Method is permissible to use. Therefore, the Modified Rational Method has been used to determine the pre-development (allowable) and post-development peak flow rates. Due to the proposed use as a residential development, the time of concentration that has been used is 10 minutes, which represents a conservative approach to determining the peak runoff as a lower time of concentration will produce a larger peak flow. The runoff coefficients from section B.4.2.1.2 of the Region of Waterloo Design Guidelines and Supplemental Specifications have been used.

Site Review Methodology

The stormwater management design for the development achieves the requirements by:

- A review of the existing drainage and overland flow route patterns and existing site characteristics,
- Calculating the predevelopment (allowable) runoff coefficients and peak flow rates for the 2 through to the 100-year design storm events,
- Calculating the post-development runoff coefficients and peak flow rates for the 2 through to the 100-year design storm events,
- Determining the needed on-site quantity control structures based on the proposed site characteristics and calculating the size requirements,
- Calculating the required on-site stormwater storage volume and surface ponding elevations, and
- Reviewing, evaluating, and specifying stormwater quality control techniques and structures.

3.2 Pre-development Condition

Under existing conditions, the property is comprised of a residential building, asphalt, and grassed/landscaped areas. Percent imperviousness for the pre-development condition is 25.2% and a calculated C-value of 0.32. There is no stormwater management on the site. The existing flows are generally directed overland toward Elliott Street and to the western property line.

See Appendix B for the SWM calculations showing the existing impervious percentage for the site. Figure 2 illustrates the pre-development catchment area, site characteristics analysis, existing drainage, and overland flow patterns.

3.3 Post-Development Condition

In the proposed condition, the subject site will be comprised of a two-storey 6-unit residential building. The remainder of the site will be comprised of grassed/landscaped areas, and parking. The proposed ground cover for the site results in a total impervious percentage of 72.8% and a C-value of 0.69.

The roof leader connections will discharge to the SWM system on site. The proposed surface drainage is to be directed to a catch basin in the central area of the Site, connected to an oil grit separator before connecting to the nearest catch basin located on Elliott Street. The remaining drainage consists of grass and is considered clean, not requiring additional quality control.

See Appendix B for the SWM calculations showing the proposed impervious percentage for the site. Figure 3 illustrates the post-development catchment areas, the site characteristics analysis, and the proposed stormwater management design.

3.4 Quantity Control Summary

The post-development design storm peak flows for the 5 to 100-year events are managed to match the allowable existing peak flows, in accordance with the requirements outlined in Sections 3.1 through 3.3. This is achieved using the IPEX Tempest Vortex 65 in ST-CBMH 3. Since the calculated orifice size is smaller than the minimum permissible size, the IPEX Tempest Vortex 65 has been appropriately sized to regulate the flow back to pre-development levels. For detailed sizing information, refer to the Tempest sizing and brochure included in Appendix B. Stormwater retention is incorporated for all design storm events within the stormwater structures, pipes, and proposed parking areas. The orifice sizing calculations can be found in Appendix B.

Table 4.1 below summarizes the pre- and post-development flows, as well as the reductions in flows for all design storm events. Additionally, Table 4.2 presents information on ponding elevations, required and provided ponding volumes, and ponding depths for all design storm events.

Table 3.1: Flow Summary

Storm Event (Yr)	Total Pre Flow (L/s)	Post Uncontrolled Flow (L/s)	Allowable Controlled Flow (L/s)	Orifice Flow (L/s)	Weir Flow (L/s)	Total Flow (L/s)	Total Post Flow (L/s)	Reduction in Flow (L/s)	Reduction in Flow (%)
2	6.44	0.80	5.65	7.80	0.00	7.80	8.60	-2.15	-33%
5	8.97	1.11	7.86	7.86	0.00	7.86	8.97	0.00	0%
10	10.28	1.27	9.01	7.88	0.00	7.88	9.15	1.12	11%
25	11.36	1.40	9.96	7.92	0.00	7.92	9.32	2.04	18%
50	12.62	1.56	11.06	7.95	0.00	7.95	9.51	3.11	25%
100	13.42	1.66	11.76	7.97	0.00	7.97	9.63	3.79	28%

Table 3.2: Ponding & Storage Summary

Storm Event (Yr)	Ponding Elevation (m)	Storage Required (m3)	Ponding Volume (m3)	Ponding Depth (m)
2	**284.93**	4.49	4.60	0.03
5	**284.96**	6.67	7.07	0.06
10	**284.97**	7.95	8.06	0.07
25	**284.99**	9.22	9.55	0.09
50	**285.01**	10.62	11.03	0.11
100	**285.03**	11.63	12.02	0.13

3.5 Quality Control Summary

To meet the required stormwater management quality control criteria outlined in section 3.1, a 1,200mm diameter First Defense FD-4HC Oil Grit Separator, or approved substitution, has been sized for the site. The OGS will be installed inline and downstream of the proposed orifice and provides 94.0% removal of total suspended solids (TSS), which exceeds the required 80% TSS removal. See Appendix C for the OGS sizing summary, typical details, and operations and maintenance information.

3.6 Erosion & Sedimentation Control

Erosion and Sediment Controls are proposed for the site design as illustrated on sheet C300, and further detailed on sheet C500, provided separately. The proposed measures include sediment control fencing and silt sack in all catch basins to be installed before the construction commences and is to be maintained per the Erosion and Sediment Control notes on sheet C500 until the development is complete with final surface and vegetation stabilized with mature growth.

4.0 Salt Management

The new development will implement the following best management practices for the removal of snow and application of salt on this site:

- A winter maintenance contractor will be hired to complete the snow removal/management works.
- Winter maintenance personnel will complete regular site inspections to assess the condition of walking and driving surfaces.
- The contractor will monitor weather forecasts to prepare for snow events.
- The contractor will be trained in winter maintenance practices and be "Smart about Salt" certified.
- Plowing of snow will be completed as required on driveways, parking areas, and sidewalks following snowfall events to ensure safe passage for motorists and pedestrians.
- Plowed snow will be stored in the snow storage areas identified on the approved Site Plan.
- Any snow that needs to be removed from the site will be disposed of at an approved snow dump location.
- Snow drifts will be controlled by frequent plowing as needed.
- Application of a sand/salt mixture (hand application) will occur immediately following plowing, if deemed required, as the application of a sand/salt mixture is not necessary each snow clearing operation.
- A sand/salt mixture will not be applied unless ice conditions develop which create a hazard for motorists and/or pedestrians.

- The contractor will monitor and document the application of a sand/salt mixture (i.e. frequency, concentration, etc.).
- Snow removal equipment will be stored off site.
- Liquid de-icing materials will be kept off site.
- Snow removal equipment washing will occur off site.

This salt management plan is to be used as a guide.

5.0 Conclusions

The stormwater management requirements for Quantity, Quality, and Erosion & Sediment Controls are based on the City of Cambridge Engineering Standards and Development Manual and are summarized in Section 2. The design and calculations in Section 3 and the Appendices demonstrate compliance with the above requirements. We trust this report satisfies the City's requirements. If there are any questions regarding the report, please do not hesitate to contact our office.

6.0 Statement of Conditions and Limitations

This document was prepared for *Dryden, Smith & Head Planning Consultants Ltd.* (the Client) and the *City of Cambridge* and has been prepared in a manner consistent with that level of care and skill ordinarily exercised by other members of the engineering profession currently practicing in the same or similar locality, under the same or similar conditions, subject to the time limits and financial, physical, or other constraints applicable to the Services.

The recommendations and conclusions provided in this document are applicable only to the specific site, development, design objectives, and purposes that are described in the text and are based on the information that was available and provided to GRIT Engineering Inc. at the time this document was prepared. This document is not intended to be exhaustive in scope and it shall be recognized that the passage of time may alter the opinions, recommendations, and conclusions that are contained in this document. The design is limited to the documents reference and any other drawings or documents prepared by GRIT Engineering Inc. provided separately. GRIT Engineering Inc. accepts no responsibility or liability for the accuracy of any information provided by others.

The information, opinions, conclusions, and recommendations expressed in the document, or any portion thereof, are for the sole benefit of the Client. The document may not be used by a third party without the expressed written consent of GRIT Engineering Inc. and the Client. Any third-party use of the document without express written consent denies any claims in Contract, Tort, and/or any other cause of action in law against GRIT Engineering Inc. and the Client.

GRIT Engineering Inc. does not accept responsibility or liability for independent conclusions, interpretations, interpolations, and/or decisions of the Client, or any third party who may come into possession of the document, or any part thereof, which may be based on data contained in the document. This restriction of liability includes, but is not limited to, decisions made to develop, acquire, or sell land.

Any referenced benchmarks or other know elevations provided in this document should be verified by a registered surveyor prior to use for any other purposes such as planning, development, layout, and/or construction.

This document is deemed to be the intellectual property of GRIT Engineering Inc. in accordance with Canadian Copyright Law and may not be reproduced beyond the stated use of the document without the express written consent of GRIT Engineering Inc.

Yours respectfully,

GRIT Engineering Inc.

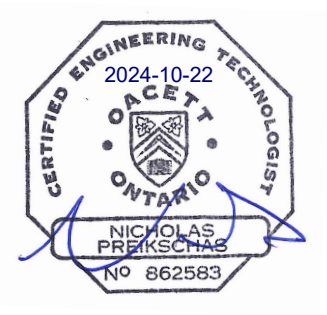

Nick Preikschas, C.E.T.
Civil Engineering Director
nick@gritengineering.ca

Ann Gibson, M.E.S., P.Eng.
Civil Engineer
ann@gritengineering.ca

Appendix A

Figures

GRIT ENGINEERING INC

133 REGENT STREET
STRATFORD, ON
N5A 3W2
www.gritengineering.ca

Legend

Project:
36 ELLIOT ST, CAMBRIDGE
RESIDENTIAL DEVELOPMENT

Figure Title:
SITE LOCATION MAP

Figure No:
1

file: c:\users\grit engineering\gritengineering.ca\communication site - documents\project work\ge23\527-1\civ\4-drawing\7-working drawings\sheet sets\ge23-0527-1-civ-swm.dwg by: grit engineering 2023-12-01

CATCHMENT AREA CHARACTERISTICS						
CATCHMENT	AREA (m^2)	BUILDING (m^2)	LANDSCAPED (m^2)	ASP/CONC. (m^2)	GRAVEL (m^2)	PERCENT IMPERVIOUS (m^2)
101	997.02	90.06	828.17	78.79	0.00	**25.2%**
Total	**997.02**	**90.06**	**828.17**	**78.79**	**0.00**	

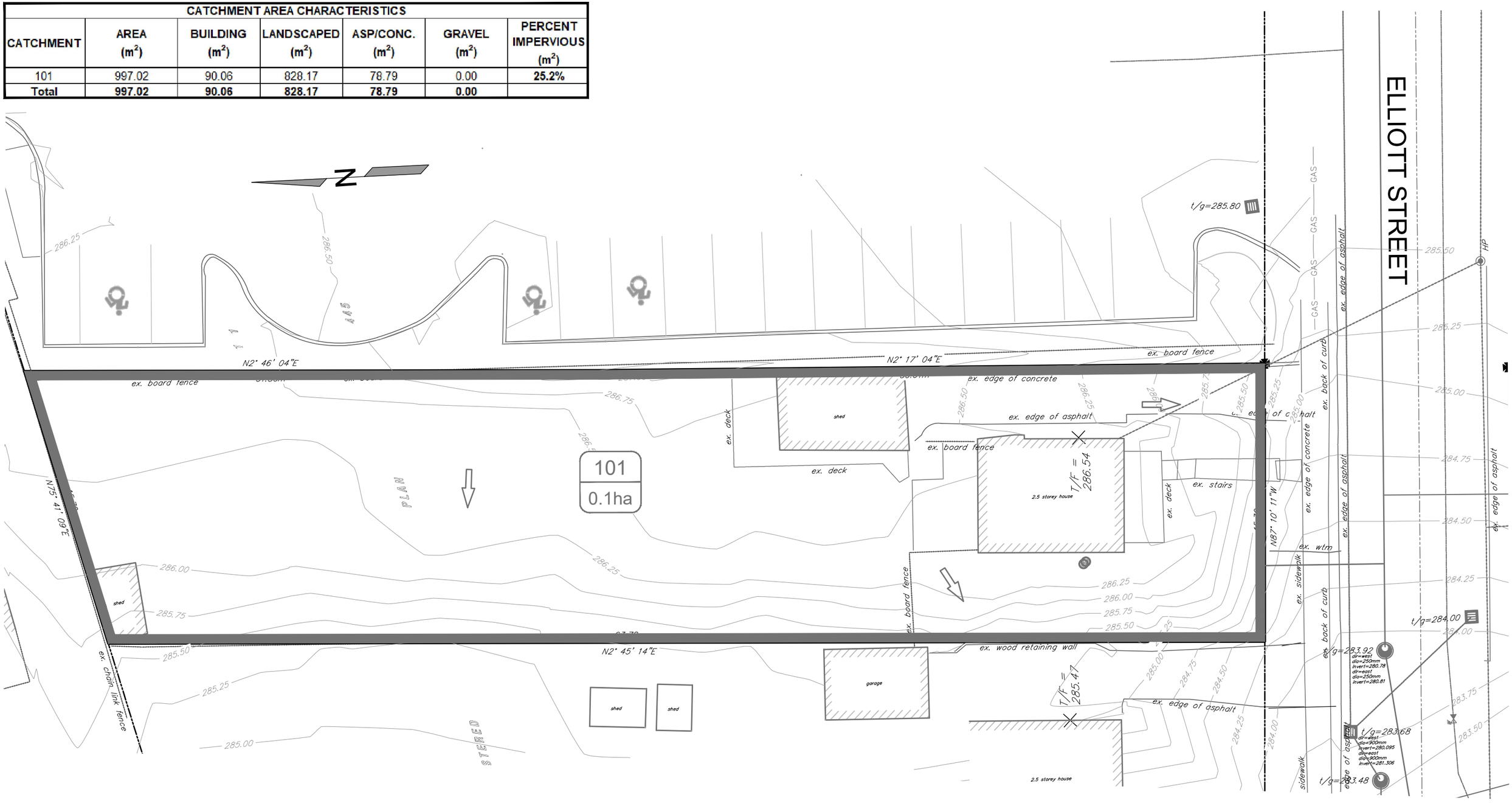

GRIT ENGINEERING INC
133 REGENT STREET
STRATFORD, ON
N5A 3W2
www.gritengineering.ca

Legend

CATCHMENT BOUNDARY

CATCHMENT PARAMETER

101
0.123

EX. OVERLAND FLOW ROUTE

EX. STORM SEWER

Project:
36 ELLIOTT ST, CAMBRIDGE
RESIDENTIAL DEVELOPMENT

Figure Title:
PRE DEVELOPMENT
CATCHMENT AREA

Figure No:
2

file: c:\users\grit engineering\grit\engineering.ca\communication site - documents\project work\gis\23\527-1\civil4-drawing\7-working drawing\sheet set\gis23-0527-1-civ-swm.dwg by: grit engineering 2023-12-01

CATCHMENT AREA CHARACTERISTICS						
CATCHMENT	AREA (m2)	BUILDING (m2)	LANDSCAPED (m2)	ASP/CONC. (m2)	GRAVEL (m2)	PERCENT IMPERVIOUS (m2)
201	127.41	0.00	107.72	19.69	0.00	23.9%
202	869.61	268.80	193.11	407.71	0.00	80.0%
Total	997.02	268.80	300.83	427.40	0.00	

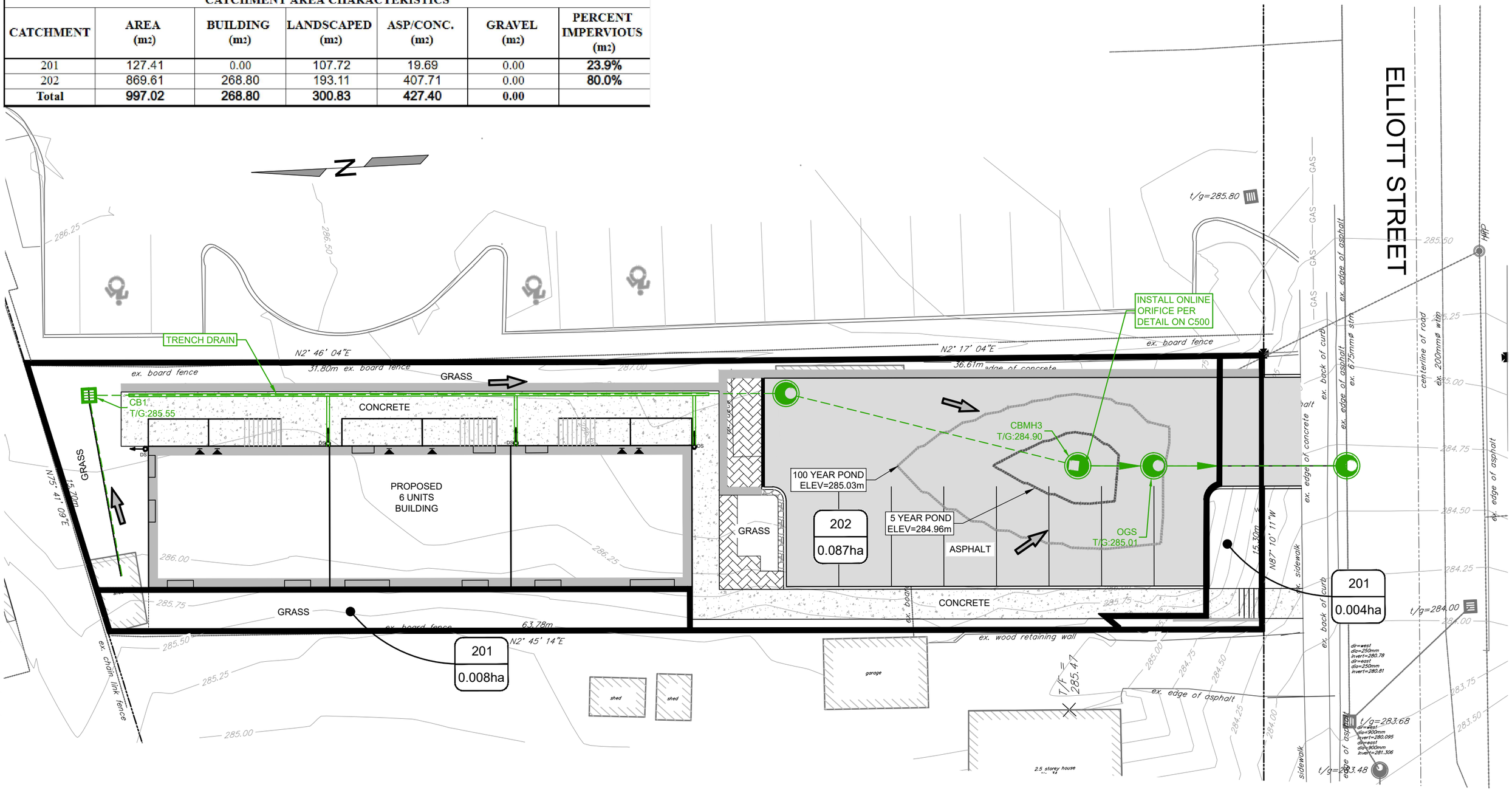

GRIT ENGINEERING INC

133 REGENT STREET
STRATFORD, ON
N5A 3W2
www.gritengineering.ca

Legend

PROPOSED STORM SEWER

CATCHMENT BOUNDARY

CATCHMENT ID — 201

CATCHMENT AREA (ha.) — 0.245

PROPOSED 2 YEAR PONDING ELEVATION

PROPOSED 100 YEAR PONDING ELEVATION

PROPOSED OVERLAND FLOW ROUTE

Project:
36 ELLIOTT ST, CAMBRIDGE
RESIDENTIAL DEVELOPMENT

Figure Title:
POST DEVELOPMENT
CATCHMENT AREA

Figure No:
3

file: c:\users\lamia\annualonedrive - gritengineering.ca\documents - project work 20230527-1\civil4-drawing7-working drawings\sheet sets\ge23-0527-1-civ-swm.dwg by: lamia hanna 2024-10-22

Appendix B

Stormwater Management Calculations

Tempest Sizing and Brochure

Storm Water Management
Project Information & Formulas

Project	New Residential Development.
Project Number	GE23-0527-1
Client	Dryden, Smith & Head Planning
Project Address	36 Elliott Street, Cambridge, Ontario
Date	October 22, 2024

Rainfall Intensity Formula:

$I = A/(B+t)^{c}$

A= *IDF Parameter*
B= *IDF Parameter*
C= *IDF Parameter*
t= Time (Min.)

Modified Rational Method Formula:

$Q = kCIA$

k= *2.78*
C= *Runoff coefficient*
I= *Rainfall intensity (mm/hr)*
A= *Contribution area (ha)*

Online Orifice:

$Q = Ca\sqrt{2gh}$

C= Discharge Coefficient (0.62)
a= Cross sectional area of orifice (m2)
g= Constant of Gravitational Pull (9.81 m/s2)
h= Total Head (m)

Weir: **Rectangular**

Q= c*L*H^3/2

c= Discharge Coefficient (1.705)
L= Length of Weir (m)
H= Maximum head (m)

Rainfall Parameters:

City of Cambridge IDF			
Rainfall Event	A	B	C
2-Year	573.1	5	0.761
5-Year	1219.800	10.500	0.823
10-Year	1728.600	14.000	0.849
25-Year	2226.900	17.000	0.865
50-Year	2640.000	19.000	0.866
100-Year	3015.100	21.000	0.870

Storm Water Management
Pre-Development Conditions

Project	New Residential Development.
Project Number	GE23-0527-1
Client	Dryden, Smith & Head Planning
Address	36 Elliott Street, Cambridge, Ontario
Date	October 22, 2024

Catchment Number: Catchment 101

Catchment Characteristics:

Surface Material	Area (m2) **(A)**	Percent Impervious	Coefficient **(C)**
Building	90.06	100%	0.90
Asphalt / Concrete	78.79	100%	0.90
Gravel	-	90%	0.90
Grass	828.18	10%	0.20
Total / Average	997.03	25.2%	0.32

Rainfall Event (Year)	A	B	C	t (min)	Intensity (mm/hr)	C' Multiplier	C	Q (L/s)
2	573.100	5.000	0.761	10	72.984	1.00	0.32	6.44
5	1219.800	10.500	0.823	10	101.56	1.00	0.32	8.97
10	1728.600	14.000	0.849	10	116.38	1.00	0.32	10.28
25	2226.900	17.000	0.865	10	128.70	1.00	0.32	11.36
50	2640.000	19.000	0.866	10	142.94	1.00	0.32	12.62
100	3015.100	21.000	0.870	10	151.99	1.00	0.32	13.42

Storm Water Management
Post-Development Conditions

Project	New Residential Development.
Project Number	GE23-0527-1
Client	Dryden, Smith & Head Planning
Address	36 Elliott Street, Cambridge, Ontario
Date	October 22, 2024

Uncontrolled Catchment: Catchment 201

Catchment Characteristics:

Surface Material	Area (m2) **(A)**	Percent Impervious	Coefficient **(C)**
Building	-	100%	0.90
Asphalt / Concrete	19.69	100%	0.90
Gravel	-	90%	0.90
Grass	107.72	10%	0.20
Total / Average	127.41	23.9%	0.31

Rainfall Event (Year)	A	B	C	t (min)	Intensity (mm/hr)	C' Multiplier	C	Q (L/s)
2	573.100	5.000	0.761	10	72.984	1.00	0.31	0.80
5	1219.800	10.500	0.823	10	101.56	1.00	0.31	1.11
10	1728.600	14.000	0.849	10	116.38	1.00	0.31	1.27
25	2226.900	17.000	0.865	10	128.70	1.00	0.31	1.40
50	2640.000	19.000	0.866	10	142.94	1.00	0.31	1.56
100	3015.100	21.000	0.870	10	151.99	1.00	0.31	1.66

Controlled Catchment: Catchment 202 - to Municipal Drain

Catchment Characteristics:

Surface Material	Area (m2) **(A)**	Percent Impervious	Coefficient **(C)**
Building	268.80	100%	0.90
Asphalt / Concrete	407.71	100%	0.90
Gravel	-	90%	0.90
Grass	193.11	10%	0.20
Total / Average	869.61	80.0%	0.74

Rainfall Event (Year)	A	B	C	t (min)	Intensity (mm/hr)	C' Multiplier	C	Q (L/s)
2	573.100	5.000	0.761	10	72.984	1.00	0.74	13.14
5	1219.800	10.500	0.823	10	101.56	1.00	0.74	18.28
10	1728.600	14.000	0.849	10	116.38	1.00	0.74	20.95
25	2226.900	17.000	0.865	10	128.70	1.00	0.74	23.17
50	2640.000	19.000	0.866	10	142.94	1.00	0.74	25.73
100	3015.100	21.000	0.870	10	151.99	1.00	0.74	27.36

GRIT ENGINEERING INC

Storm Water Management
Post-Development Design Information

Project	New Residential Development.
Project Number	GE23-0527-1
Client	Dryden, Smith & Head Planning
Address	36 Elliott Street, Cambridge, Ontario
Date	October 22, 2024

Design Summary

Storm Event (Yr)	Total Pre Flow (L/s)	Post Uncontrolled Flow (L/s)	Allowable Controlled Flow (L/s)	Controlled Flow			Total Post Flow (L/s)	Reduction in Flow (L/s)	Reduction in Flow (%)	Ponding Elevation (m)	Storage Required (m3)	Ponding Volume (m3)	Ponding Depth (m)
				Vortex Flow (L/s)	Weir Flow (L/s)	Total Flow (L/s)							
2	6.44	0.80	5.65	5.40	0.00	5.40	6.19	0.25	4%	**284.93**	4.49	4.60	0.03
5	8.97	1.11	7.86	5.44	0.00	5.44	6.55	2.42	27%	**284.96**	6.67	7.07	0.06
10	10.28	1.27	9.01	5.45	0.00	5.45	6.72	3.55	35%	**284.97**	7.95	8.06	0.07
25	11.36	1.40	9.96	5.48	0.00	5.48	6.88	4.48	39%	**284.99**	9.22	9.55	0.09
50	12.62	1.56	11.06	5.50	0.00	5.50	7.06	5.56	44%	**285.01**	10.62	11.03	0.11
100	13.42	1.66	11.76	5.52	0.00	5.52	7.18	6.24	47%	**285.03**	11.63	12.02	0.13

Underground Storage in Structures

Location	Size (m)	Area (m^2)	Depth (m)	Volume (m^3)
CB1	0.60	0.36	2.00	0.72
CBMH2	0.60	0.36	1.55	0.56
			Total Structure Volume	**1.28**

Underground Storage in Pipes

Location	Dia. (m)	Area (m^2)	Length (m)	Volume (m^3)
CB1-CBMH2	0.250	0.05	27.30	1.34
			Total Pipe Volume	**1.34**

Stage Storage Discharge

Stage	Elevation (m)	Surface Volume (m^3)	Total Volume (m^3)	Vortex Head (m)	Vortex Flow (L/s)	Weir Height of Flow (m)	Weir Flow (L/s)	Total Flow (L/s)
1	284.90	0.00	2.62	2.20	5.364	N/A	0.000	5.364
2	284.91	0.49	3.11	2.21	5.372	N/A	0.000	5.372
3	284.91	0.99	3.61	2.21	5.380	N/A	0.000	5.380
4	284.92	1.48	4.10	2.22	5.388	N/A	0.000	5.388
5	284.93	1.98	4.60	2.23	5.396	N/A	0.000	5.396
6	284.93	2.47	5.09	2.23	5.404	N/A	0.000	5.404
7	284.94	2.97	5.59	2.24	5.412	N/A	0.000	5.412
8	284.95	3.46	6.08	2.25	5.420	N/A	0.000	5.420
9	284.95	3.96	6.58	2.25	5.428	N/A	0.000	5.428
10	284.96	4.45	7.07	2.26	5.436	N/A	0.000	5.436
11	284.97	4.95	7.57	2.27	5.445	N/A	0.000	5.445
12	284.97	5.44	8.06	2.27	5.453	N/A	0.000	5.453
13	284.98	5.94	8.56	2.28	5.461	N/A	0.000	5.461
14	284.99	6.43	9.05	2.29	5.469	N/A	0.000	5.469
15	284.99	6.93	9.55	2.29	5.477	N/A	0.000	5.477
16	285.00	7.42	10.04	2.30	5.485	N/A	0.000	5.485
17	285.01	7.92	10.54	2.31	5.493	N/A	0.000	5.493
18	285.01	8.41	11.03	2.31	5.501	N/A	0.000	5.501
19	285.02	8.91	11.53	2.32	5.509	N/A	0.000	5.509
20	285.03	9.40	12.02	2.33	5.517	N/A	0.000	5.517
21	285.03	9.90	12.52	2.33	5.525	N/A	0.000	5.525
22	285.04	10.39	13.01	2.34	5.533	N/A	0.000	5.533
23	285.05	10.89	13.51	2.35	5.541	N/A	0.000	5.541
24	285.05	11.38	14.00	2.35	5.549	N/A	0.000	5.549
25	285.06	11.88	14.50	2.36	5.557	N/A	0.000	5.557
26	285.07	12.37	14.99	2.36	5.565	N/A	0.000	5.565
27	285.07	12.87	15.49	2.37	5.573	N/A	0.000	5.573
28	285.08	13.36	15.98	2.38	5.581	N/A	0.000	5.581
29	285.08	13.86	16.48	2.38	5.589	N/A	0.000	5.589
30	285.09	14.35	16.97	2.39	5.598	N/A	0.000	5.598
31	285.10	14.85	17.47	2.40	5.606	N/A	0.000	5.606

Pond Information

Top of Grate Elevation=	284.90	m
Max Ponding Elevation=	285.10	m
Elevation Increment=	0.0066	m
No of Stages=	31	
Volume in Structures=	1.28	m^3
Volume in Pipes=	1.34	m^3

Orifice Information

Online Orifice=	**Cav2gh**	
Restricted Storm Event=	2	Year
Orifice Area=	0.0014	m^2
Orifice Diameter=	**42**	**mm**
Orifice Invert=	282.7	m
Orifice Head @ Pond Elev.=	2.23	m
Coefficient=	0.62	
Restricted Storm Flow=	5.65	L/s

Calculated Orifice smaller than minimum size of 75mm, therefore use IPEX TEMPEST LMF ICD Vortex 65

Weir Information

Weir Length=	6.00	m
Weir Invert=	285.10	m
Type=	**Rectangular**	
Q=	c*L*H^3/2	
c=	Discharge Coefficient (1.705)	
L=	Length of Weir (m)	
H=	Maximum head (m)	

2-Year Storage Calculation - Maximum Storage = 4.49 m^3

Time (t) (min)	Intensity (I) (mm/hr) *(A/(B+t) C)*	Controlled Flow (Q_i) (L/s) *(=2.78CIA)*	Volume In Q_i*t*60/1000 (m^3)	Restricted Outflow (Q_o) (L/s)	Volume Out (V_o) Q_o*t*60/1000	Storage Required (m^3)
10	72.98	13.14	7.88	5.65	3.39	4.49
15	58.63	10.55	9.50	5.65	5.08	4.42
20	49.48	8.91	10.69	5.65	6.78	3.91
25	43.07	7.75	11.63	5.65	8.47	3.16
30	38.30	6.89	12.41	5.65	10.17	2.24
35	34.60	6.23	13.08	5.65	11.86	1.22
40	31.63	5.69	13.67	5.65	13.55	0.11
45	29.20	5.26	14.19	5.65	15.25	-1.06
50	27.15	4.89	14.66	5.65	16.94	-2.28
55	25.41	4.57	15.10	5.65	18.64	-3.54
60	23.91	4.30	15.49	5.65	20.33	-4.84
65	22.60	4.07	15.87	5.65	22.02	-6.16
70	21.44	3.86	16.21	5.65	23.72	-7.51
75	20.42	3.67	16.54	5.65	25.41	-8.88
80	19.50	3.51	16.84	5.65	27.11	-10.26
85	18.67	3.36	17.14	5.65	28.80	-11.67
90	17.91	3.22	17.41	5.65	30.50	-13.08

5-Year Storage Calculation - Maximum Storage = 6.67 m^3

Time (t) (min)	Intensity (I) (mm/hr) *(A/(B+t) C)*	Controlled Flow (Q_i) (L/s) *(=2.78CIA)*	Volume In Q_i*t*60/1000 (m^3)	Restricted Outflow (Q_o) (L/s)	Volume Out (V_o) Q_o*t*60/1000	Storage Required (m^3)
10	101.56	18.28	10.97	7.86	4.71	6.25
15	84.86	15.27	13.75	7.86	7.07	6.67
20	73.23	13.18	15.82	7.86	9.43	6.39
25	64.63	11.63	17.45	7.86	11.79	5.66
30	57.99	10.44	18.79	7.86	14.14	4.64
35	52.69	9.48	19.92	7.86	16.50	3.41
40	48.36	8.70	20.89	7.86	18.86	2.03
45	44.74	8.05	21.75	7.86	21.22	0.53
50	41.68	7.50	22.51	7.86	23.57	-1.07
55	39.04	7.03	23.19	7.86	25.93	-2.74
60	36.75	6.61	23.81	7.86	28.29	-4.48
65	34.73	6.25	24.38	7.86	30.65	-6.27
70	32.95	5.93	24.91	7.86	33.00	-8.10
75	31.35	5.64	25.40	7.86	35.36	-9.97
80	29.92	5.39	25.85	7.86	37.72	-11.87
85	28.63	5.15	26.28	7.86	40.08	-13.80
90	27.45	4.94	26.68	7.86	42.43	-15.76

10-Year Storage Calculation - Maximum Storage = 7.95 m³						
Time (t) (min)	Intensity (I) (mm/hr) *(A/(B+t) C)*	Controlled Flow (Q_i) (L/s) *(=2.78CIA)*	Volume In Q_i*t*60/1000 (m^3)	Restricted Outflow (Q_o) (L/s)	Volume Out (V_o) Q_o*t*60/1000	Storage Required (m^3)
10	116.38	20.95	12.57	9.01	5.40	7.17
15	99.11	17.84	16.06	9.01	8.10	7.95
20	86.59	15.59	18.70	9.01	10.81	7.90
25	77.07	13.87	20.81	9.01	13.51	7.30
30	69.57	12.52	22.54	9.01	16.21	6.33
35	63.49	11.43	24.00	9.01	18.91	5.09
40	58.46	10.52	25.26	9.01	21.61	3.64
45	54.23	9.76	26.36	9.01	24.31	2.04
50	50.61	9.11	27.33	9.01	27.02	0.31
55	47.48	8.55	28.20	9.01	29.72	-1.52
60	44.74	8.05	28.99	9.01	32.42	-3.43
65	42.33	7.62	29.71	9.01	35.12	-5.41
70	40.18	7.23	30.37	9.01	37.82	-7.45
75	38.25	6.89	30.98	9.01	40.52	-9.54
80	36.52	6.57	31.55	9.01	43.23	-11.68
85	34.95	6.29	32.08	9.01	45.93	-13.85
90	33.51	6.03	32.58	9.01	48.63	-16.05

25-Year Storage Calculation - Maximum Storage = 9.22 m³						
Time (t) (min)	Intensity (I) (mm/hr) *(A/(B+t) C)*	Controlled Flow (Q_i) (L/s) *(=2.78CIA)*	Volume In Q_i*t*60/1000 (m^3)	Restricted Outflow (Q_o) (L/s)	Volume Out (V_o) Q_o*t*60/1000	Storage Required (m^3)
10	128.70	23.17	13.90	9.96	5.97	7.92
15	111.11	20.00	18.00	9.96	8.96	9.04
20	98.00	17.64	21.17	9.96	11.95	9.22
25	87.82	15.81	23.71	9.96	14.94	8.77
30	79.68	14.34	25.82	9.96	17.92	7.89
35	73.01	13.14	27.60	9.96	20.91	6.68
40	67.43	12.14	29.13	9.96	23.90	5.23
45	62.70	11.29	30.47	9.96	26.89	3.59
50	58.63	10.55	31.66	9.96	29.87	1.79
55	55.09	9.92	32.73	9.96	32.86	-0.14
60	51.99	9.36	33.69	9.96	35.85	-2.16
65	49.23	8.86	34.56	9.96	38.84	-4.28
70	46.78	8.42	35.36	9.96	41.82	-6.46
75	44.57	8.02	36.10	9.96	44.81	-8.71
80	42.57	7.66	36.78	9.96	47.80	-11.02
85	40.76	7.34	37.42	9.96	50.79	-13.37
90	39.11	7.04	38.01	9.96	53.77	-15.76

50-Year Storage Calculation - Maximum Storage = 10.62 m³						
Time (t) (min)	Intensity (I) (mm/hr) *(A/(B+t) C)*	Controlled Flow (Q_i) (L/s) *(=2.78CIA)*	Volume In Q_i*t*60/1000 (m^3)	Restricted Outflow (Q_o) (L/s)	Volume Out (V_o) Q_o*t*60/1000	Storage Required (m^3)
10	142.94	25.73	15.44	11.06	6.64	8.80
15	124.55	22.42	20.18	11.06	9.95	10.22
20	110.60	19.91	23.89	11.06	13.27	10.62
25	99.63	17.93	26.90	11.06	16.59	10.31
30	90.76	16.34	29.41	11.06	19.91	9.50
35	83.44	15.02	31.54	11.06	23.23	8.31
40	77.28	13.91	33.38	11.06	26.55	6.84
45	72.02	12.96	35.00	11.06	29.86	5.14
50	67.48	12.15	36.44	11.06	33.18	3.26
55	63.51	11.43	37.73	11.06	36.50	1.22
60	60.01	10.80	38.89	11.06	39.82	-0.93
65	56.91	10.24	39.95	11.06	43.14	-3.19
70	54.13	9.74	40.92	11.06	46.45	-5.53
75	51.63	9.29	41.82	11.06	49.77	-7.96
80	49.36	8.88	42.65	11.06	53.09	-10.44
85	47.30	8.51	43.42	11.06	56.41	-12.99
90	45.41	8.17	44.14	11.06	59.73	-15.59

100-Year Storage Calculation - Maximum Storage = 11.63 m³						
Time (t) (min)	Intensity (I) (mm/hr) *(A/(B+t) C)*	Controlled Flow (Q_i) (L/s) *(=2.78CIA)*	Volume In Q_i*t*60/1000 (m^3)	Restricted Outflow (Q_o) (L/s)	Volume Out (V_o) Q_o*t*60/1000	Storage Required (m^3)
10	151.99	27.36	16.41	11.76	7.06	9.36
15	133.45	24.02	21.62	11.76	10.58	11.03
20	119.17	21.45	25.74	11.76	14.11	11.63
25	107.82	19.41	29.11	11.76	17.64	11.47
30	98.56	17.74	31.93	11.76	21.17	10.77
35	90.86	16.35	34.35	11.76	24.70	9.65
40	84.35	15.18	36.44	11.76	28.23	8.21
45	78.76	14.18	38.28	11.76	31.75	6.52
50	73.91	13.30	39.91	11.76	35.28	4.63
55	69.66	12.54	41.38	11.76	38.81	2.57
60	65.91	11.86	42.71	11.76	42.34	0.37
65	62.56	11.26	43.92	11.76	45.87	-1.95
70	59.56	10.72	45.02	11.76	49.39	-4.37
75	56.85	10.23	46.05	11.76	52.92	-6.88
80	54.39	9.79	46.99	11.76	56.45	-9.46
85	52.15	9.39	47.88	11.76	59.98	-12.10
90	50.10	9.02	48.70	11.76	63.51	-14.81

Flow Parameters

Head (m)	2.23
Flow (Lps)	5.65

Input desired parameters in green boxes at left and then refer to graphs below for corresponding flow curves. If your design criteria fall outside the maximum parameters of this flow curve calculator please contact your IPEX representative for your TEMPEST design.

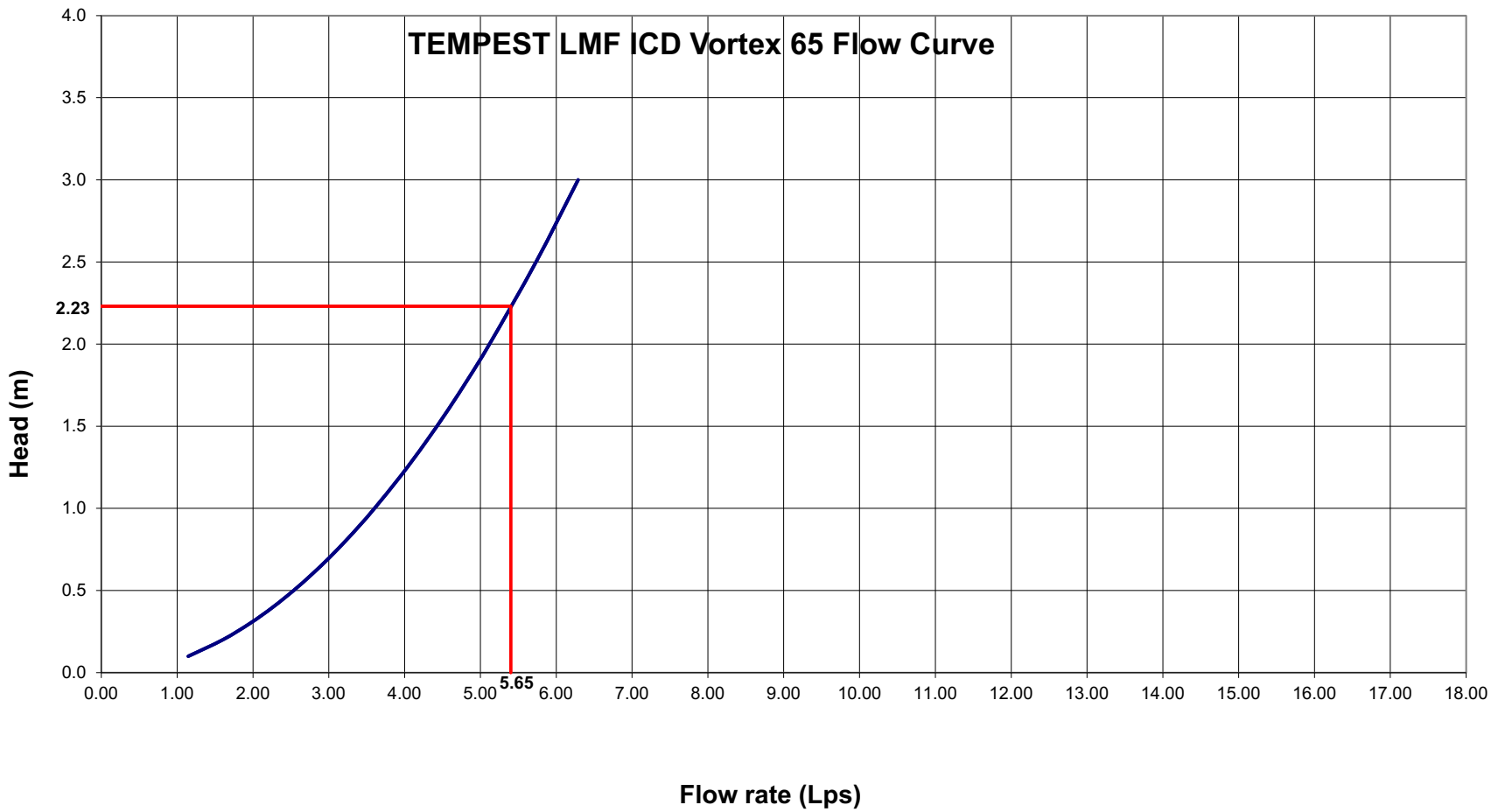

THE NEXT GENERATION IN STORM SEWER INLET CONTROLS

TEMPEST™
INLET CONTROL DEVICES

STORM WATER FLOW CONTROL

THE COST-EFFECTIVE SOLUTION TO YOUR STORM WATER SURCHARGE PROBLEMS

- Conserves sewer system capacity
- System accommodates low to high flows
- Integrated odour and floatable control
- Fast and easy to install and maintain

IPEX
by aliaxis

We build tough products for tough environments®

TEMPEST™
INLET CONTROL DEVICES

THE NEXT GENERATION IN STORM SEWER INLET CONTROLS

✓ Reduces Sewer Overflows & Basement Backups

Tempest is a family of cost-effective inlet control devices that work together across a series of catch basins to limit the amount of storm water runoff that can enter a combined sewer system during a storm event. Basement backups and sewer overflows are avoided because storm water surcharges are controlled at the sewer inlet and are allowed to remain in catch basins or temporarily above ground.

✓ Integrated Odour & Floatable Control

In addition to flow control, Tempest systems can also alleviate sewer system odour emissions as well as prevent floating debris from entering the sewer system.

✓ Wide Range of Models & Pre-set Flow Rates

Available in a wide range of patent pending models and pre-set flow rates, Tempest systems can accommodate most storm water flow control requirements from 32 GPM to 270 GPM and beyond. Application specific solutions can also be engineered to meet your unique needs in both wet and dry catch basin environments.

✓ Easy to Install & Maintain

Constructed from durable PVC, Tempest units are corrosion free and built to last. The Tempest's light weight design accommodates both square and round catch basins and features a universal back plate and interchangeable components with no moving parts that makes the units quick and easy to install over a catch basin outlet pipe.

These devices also include a quick release mechanism to allow easy access for service without the need to drain the installation.

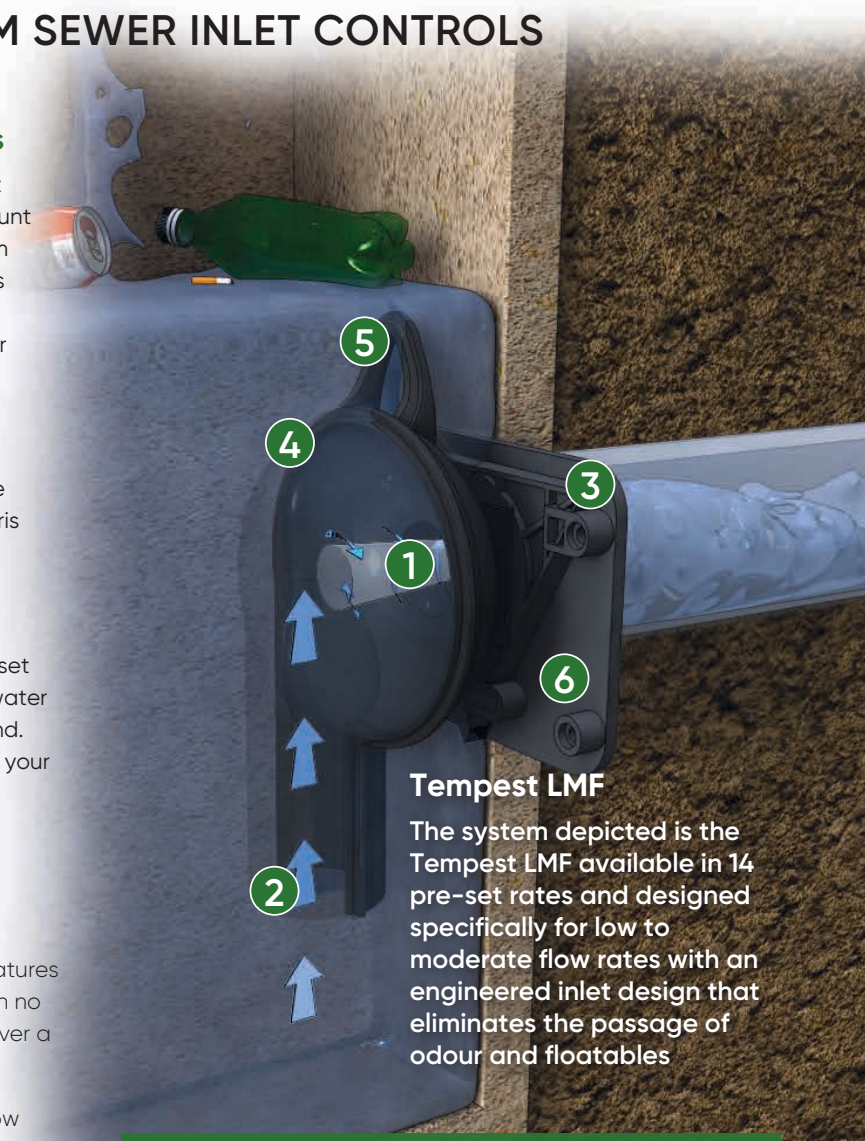

Tempest LMF

The system depicted is the Tempest LMF available in 14 pre-set rates and designed specifically for low to moderate flow rates with an engineered inlet design that eliminates the passage of odour and floatables

Tempest Inlet Control Devices restrict flow to a narrower range than traditional methods regardless of head

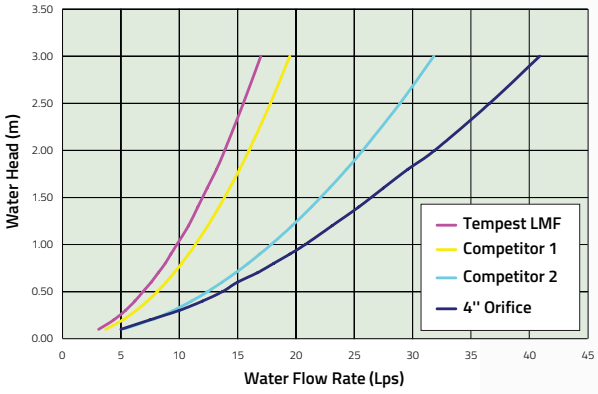

FEATURES & BENEFITS

1. Restricts flow to a narrow range regardless of head
2. Unit design prevents the passage of floatables and odours
3. Neoprene gasket for air-tight seal*
4. Virtually maintenance free and corrosion free durable PVC construction
5. Features a quick release mechanism that's accessed with reach bar. Unit can then be simply lifted out for easy maintenance*
6. Universal back plates available for both square and round catch basins*

* Excluding Tempest HF Sump

THE TEMPEST FAMILY OF SYSTEMS

TEMPEST LMF

Restricts:
- ✓ Flow
- ✓ Odours
- ✓ Floatables

LOW to MODERATE FLOW RATES
32 GPM (2 L/s) – 270 GPM (17 L/s)
14 pre-set flow rates

The Tempest LMF system features a vortex inlet design that allows a low flow rate to be set and eliminates the passage of odours and floatables and allows for debris and sediment to collect in the structure.

TEMPEST MHF

Restricts:
- ✓ Flow

MEDIUM TO HIGH FLOW RATES
143 GPM (9L/s) or greater
Specified pre-set flow rates

The Tempest MHF is a standard orifice plate or plug device designed to allow a specified flow volume through the outlet pipe at a specified head.

TEMPEST HF & HF SUMP

Restricts:
- ✓ Flow
- ✓ Odours
- ✓ Floatables

HIGH FLOW RATES
240 GPM (15 L/s) or greater
5 pre-set flow rates

The standard Tempest HF system allows a near constant discharge rate to be set and eliminates the passage of odours and floatables and allows for debris and sediment to collect in the structure.

The Tempest HF SUMP system is designed for catch basins & manholes in which there is no sump or the outlet pipe is too low to install standard Tempest device.

UNIVERSAL BACK PLATES

Available for BOTH square and round catch basins.*

For square catch basins

For round catch basins

SOLUTION: TEMPEST INLET CONTROL SYSTEMS

- Provides control by restricting flow into the sewer system
- Provides temporary ponding in catch basins, parking lots & roadways
- Helps preserve sewer capacity, slows down the inlet flow
- Reduces residential flooding and flash flooding
- Water surcharge is controlled and directed as per engineer design
- Can accommodate outlet pipes 6" and larger

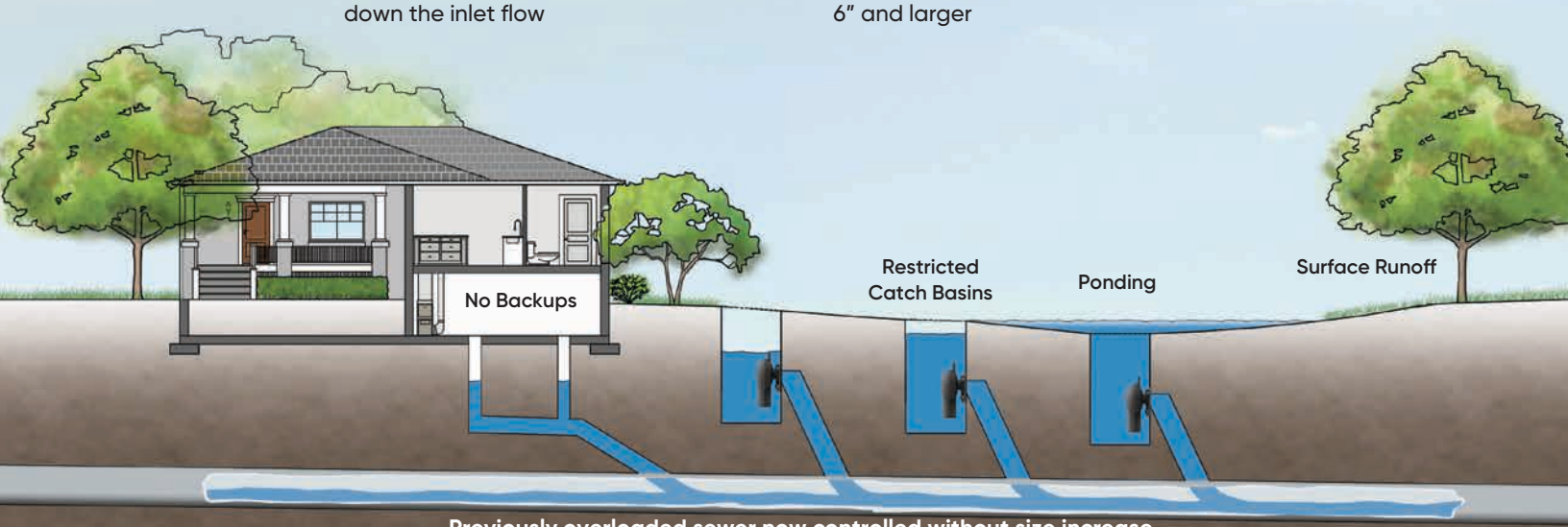

Previously overloaded sewer now controlled without size increase

CUSTOMER SERVICE CENTRE

IPEX Inc.
Toll Free: (866) 473-9462
ipexna.com

About the IPEX Group of Companies

As leading suppliers of thermoplastic piping systems, the IPEX Group of Companies provides our customers with some of the largest and most comprehensive product lines. All IPEX products are backed by more than 50 years of experience. With state-of-the-art manufacturing facilities and distribution centers across North America, we have earned a reputation for product innovation, quality, end-user focus and performance.

Markets served by IPEX group products are:

- Electrical systems
- Telecommunications and utility piping systems
- PVC, CPVC, PP, PVDF, PE, ABS, and PEX pipe and fittings
- Industrial process piping systems
- Municipal pressure and gravity piping systems
- Plumbing and mechanical piping systems
- Electrofusion systems for gas and water
- Industrial, plumbing and electrical cements
- Irrigation systems

Products manufactured by IPEX Inc.
TEMPEST™ is a trademark of IPEX Branding Inc.

This literature is published in good faith and is believed to be reliable. However, it does not represent and/or warrant in any manner the information and suggestions contained in this brochure. Data presented is the result of laboratory tests and field experience.

A policy of ongoing product improvement is maintained. This may result in modifications of features and/or specifications without notice.

IPEX by aliaxis

BRMNTPIP170103RC
© 2019 IPEX MN0203C

Appendix C

Oil-Grit Separator System Summary

ADS OGS Sizing Summary

Project Name:	36 Elliott Street
Consulting Engineer:	GRIT Engineering
Location:	Cambridge, ON
Sizing Completed By:	C. Neath
Email:	cody.neath@ads-pipe.com

Treatment Requirements		
Treatment Goal:	Enhanced (MOE)	
Selected Parameters:	80% TSS	90% Volume
Selected Unit:	**FD-4HC**	

Site Details	
Site Area:	0.1 ha
% Impervious:	80%
Rational C:	0.78
Rainfall Station:	Waterloo_Wellington
Particle Size Distribution:	Fine
Peak Flowrate:	---

Summary of Results		
Model	**TSS Removal**	**Volume Treated**
FD-4HC	98.0%	>90%
FD-5HC	99.0%	>90%
FD-6HC	99.0%	>90%
FD-8HC	100.0%	>90%
FD-10HC	100.0%	>90%

FD-4HC Specification	
Unit Diameter (A):	1,200 mm
Inlet Pipe Diameter (B):	300 mm
Outlet Pipe Diameter (C):	300 mm
Height, T/G to Outlet Invert (D):	2000 mm
Height, Outlet Invert to Sump (E):	1515 mm
Sediment Storage Capacity (F):	0.78 m³
Oil Storage Capacity (G):	723 L
Recommended Sediment Depth for Maintenance:	440 mm
Max. Pipe Diameter:	600 mm
Peak Flow Capacity:	510 L/s

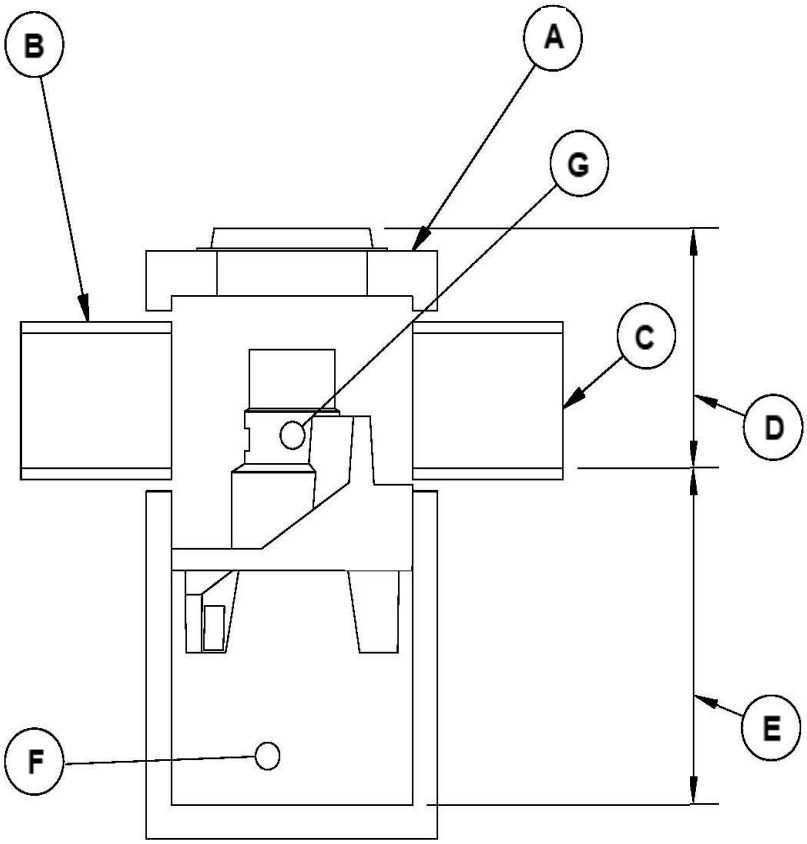

Site Elevations:	
Rim Elevation:	100.00
Inlet Pipe Elevation:	98.00
Outlet Pipe Elevation:	98.00

Notes:

Removal efficiencies are based on NJDEP Test Protocols and independently verified.

All units supplied by ADS have numerous local, provincial, and international certifications (copies of which can be provided upon request). The design engineer is responsible for ensuring compliance with applicable regulations.

Project Name: 36 Elliott Street
Consulting Engineer: GRIT Engineering
Location: Cambridge, ON

Net Annual Removal Efficiency Summary: FD-4HC

Rainfall Intensity(1)	Fraction of Rainfall(1)	FD-4HC Removal Efficiency(2)	Weighted Net-Annual Removal Efficiency
mm/hr	%	%	%
0.50	0.3%	100.0%	0.3%
1.00	27.0%	100.0%	27.0%
1.50	3.2%	100.0%	3.2%
2.00	13.6%	100.0%	13.6%
2.50	7.2%	100.0%	7.2%
3.00	1.8%	100.0%	1.8%
3.50	6.7%	100.0%	6.7%
4.00	3.7%	100.0%	3.7%
4.50	1.5%	100.0%	1.5%
5.00	4.8%	100.0%	4.8%
6.00	3.3%	100.0%	3.3%
7.00	4.7%	100.0%	4.7%
8.00	2.8%	98.8%	2.7%
9.00	2.0%	97.8%	1.9%
10.00	2.5%	96.8%	2.4%
20.00	9.0%	90.8%	8.2%
30.00	3.1%	87.4%	2.7%
40.00	1.0%	85.1%	0.9%
50.00	0.8%	83.4%	0.6%
100.00	0.9%	78.1%	0.7%
150.00	0.1%	75.3%	0.1%
200.00	0.0%	73.3%	0.0%
		Total Net Annual Removal Efficiency:	98.1%
		Total Runoff Volume Treated:	>90%

Notes:

(1) Rainfall Data: 1981:2007,HLY03 6149387, Waterloo/Wellingotn Airport, ON

(2) Based on third party verified data and appoximating the removal of a PSD similar to the STC Fine distribution

(3) Rainfall adjusted to 5 min peak intensity based on hourly average.

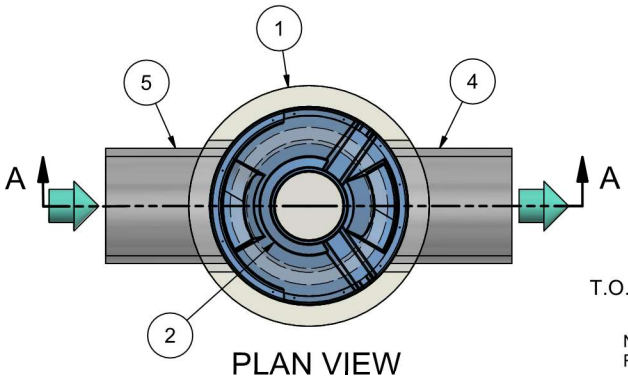

PLAN VIEW

HYDRO FRAME AND COVER (INCLUDED)

GRADE RINGS BY OTHERS AS REQUIRED

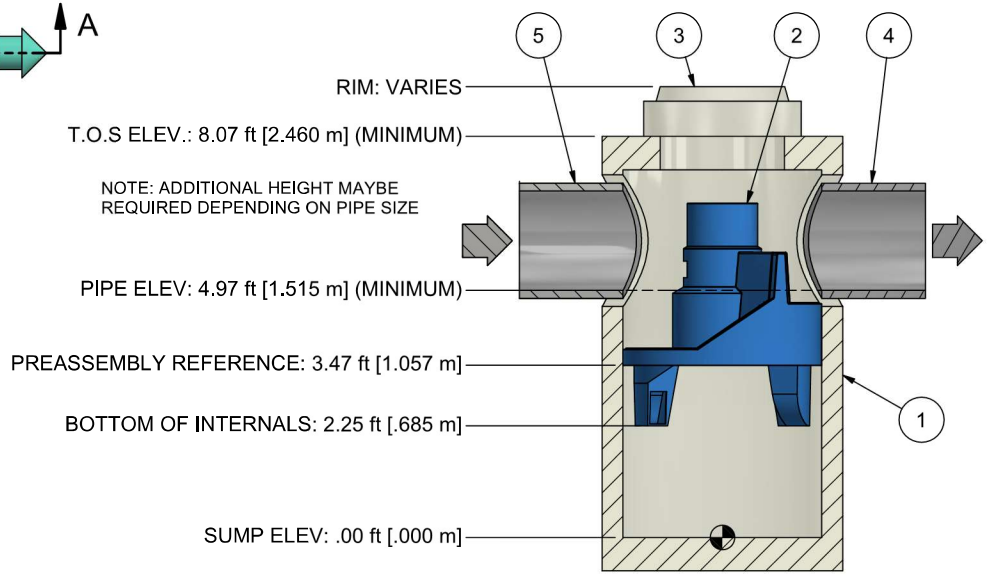

SECTION A-A

1. MANHOLE WALL AND SLAB THICKNESSES ARE NOT TO SCALE.

2. CONTACT HYDRO INTERNATIONAL FOR A BOTTOM OF STRUCTURE ELEVATION PRIOR TO SETTING FIRST DEFENSE MANHOLE.

3. CONTRACTOR TO CONFIRM RIM, PIPE INVERTS, PIPE DIA. AND PIPE ORIENTATION PRIOR TO RELEASE OF UNIT TO FABRICATION.

PRODUCT SPECIFICATION:

1. Peak Hydraulic Flow: 18.0 cfs (510 l/s)
2. Min Sediment Storage Capacity: 0.7 cu. yd. (0.5 cu. m.)
3. Maximum Inlet/Outlet Pipe Diameters: 24 in. (600 mm)
4. The Treatment System Shall Use An Induced Vortex To Separate Pollutants From Stormwater Runoff.
5. For More Product Information Including Regulatory Acceptances, Please Visit https://hydro-int.com/en/products/first-defense

GENERAL NOTES:
1. General Arrangement drawings only. Contact Hydro International for site specific drawings.
2. The diameter of the inlet and outlet pipes may be no more than 24".
3. Multiple inlet pipes possible (refer to project plan).
4. Inlet/outlet pipe angle can vary to align with drainage network (refer to project plan.s)
5. Peak flow rate and minimum height limited by available cover and pipe diameter.
6. Larger sediment storage capacity may be provided with a deeper sump depth.

PARTS LIST

ITEM	QTY	SIZE (in)	SIZE (mm)	DESCRIPTION
1	1	48	1200	I.D. PRECAST MANHOLE
2	1			INTERNAL COMPONENTS (PRE-INSTALLED)
3	1	30	750	FRAME AND COVER (ROUND)
4	1	24 (MAX)	600 (MAX)	OUTLET PIPE (BY OTHERS)
5	1	24 (MAX)	600 (MAX)	INLET PIPE (BY OTHERS)

PROJECTION

IF IN DOUBT ASK

DATE:	SCALE:	
10/7/2019	1:30	
DRAWN BY: ER	CHECKED BY: MRJ	APPROVED BY

Title
4-ft DIAMETER
FIRST DEFENSE

GENERAL ARRANGEMENT

Hydro International®
hydro-int.com
HYDRO INTERNATIONAL

WEIGHT:	MATERIAL:	
19448 lbmass		
STOCK NUMBER:		
DRAWING NO.: FD GA-4		
SHEET SIZE: B	SHEET: 1 OF 1	Rev: -

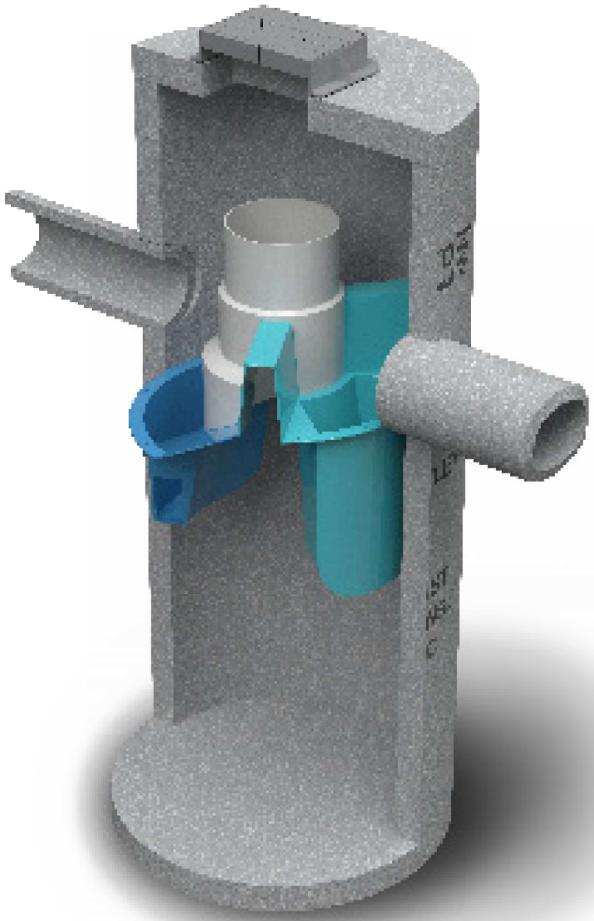

Operation and Maintenance Manual

First Defense® High Capacity and First Defense® Optimum

Vortex Separator for Stormwater Treatment

Table of Contents

3 First Defense® by Hydro International
- Introduction
- Operation
- Pollutant Capture and Retention

4 Model Sizes & Configurations
- First Defense® Components

5 Maintenance
- Overview
- Maintenance Equipment Considerations
- Determining Your Maintenance Schedule

6 Maintenance Procedures
- Inspection
- Floatables and Sediment Clean Out

8 First Defense® Installation Log

9 First Defense® Inspection and Maintenance Log

COPYRIGHT STATEMENT: The contents of this manual, including the graphics contained herein, are intended for the use of the recipient to whom the document and all associated information are directed. Hydro International plc owns the copyright of this document, which is supplied in confidence. It must not be used for any purpose other than that for which it is supplied and must not be reproduced, in whole or in part stored in a retrieval system or transmitted in any form or by any means without prior permission in writing from Hydro International plc. First Defense® is a trademarked hydrodynamic vortex separation device of Hydro International plc. A patent covering the First Defense® has been granted.

DISCLAIMER: Information and data contained in this manual is exclusively for the purpose of assisting in the operation and maintenance of Hydro International plc's First Defense®. No warranty is given nor can liability be accepted for use of this information for any other purpose. Hydro International plc has a policy of continuous product development and reserves the right to amend specifications without notice.

Hydro International (Stormwater), 94 Hutchins Drive, Portland ME 04102
Tel: (207) 756-6200 Fax: (207) 756-6212 Web: www.hydro-int.com

I. First Defense® by Hydro International

Introduction

The First Defense® is an enhanced vortex separator that combines an effective and economical stormwater treatment chamber with an integral peak flow bypass. It efficiently removes total suspended solids (TSS), trash and hydrocarbons from stormwater runoff without washing out previously captured pollutants. The First Defense® is available in several model configurations to accommodate a wide range of pipe sizes, peak flows and depth constraints.

The two product models described in this guide are the First Defense® High Capacity and the First Defense® Optimum; they are inspected and maintained identically.

Operation

The First Defense® operates on simple fluid hydraulics. It is self-activating, has no moving parts, no external power requirement and is fabricated with durable non-corrosive components. No manual procedures are required to operate the unit and maintenance is limited to monitoring accumulations of stored pollutants and periodic clean-outs. The First Defense® has been designed to allow for easy and safe access for inspection, monitoring and clean-out procedures. Neither entry into the unit nor removal of the internal components is necessary for maintenance, thus safety concerns related to confined-space-entry are avoided.

Pollutant Capture and Retention

The internal components of the First Defense® have been designed to optimize pollutant capture. Sediment is captured and retained in the base of the unit, while oil and floatables are stored on the water surface in the inner volume (Fig.1).

The pollutant storage volumes are isolated from the built-in bypass chamber to prevent washout during high-flow storm events. The sump of the First Defense® retains a standing water level between storm events. This ensures a quiescent flow regime at the onset of a storm, preventing resuspension and washout of pollutants captured during previous events.

Accessories such as oil absorbent pads are available for enhanced oil removal and storage. Due to the separation of the oil and floatable storage volume from the outlet, the potential for washout of stored pollutants between clean-outs is minimized.

Applications

- Stormwater treatment at the point of entry into the drainage line
- Sites constrained by space, topography or drainage profiles with limited slope and depth of cover
- Retrofit installations where stormwater treatment is placed on or tied into an existing storm drain line
- Pretreatment for filters, infiltration and storage

Advantages

- Inlet options include surface grate or multiple inlet pipes
- Integral high capacity bypass conveys large peak flows without the need for “offline” arrangements using separate junction manholes
- Long flow path through the device ensures a long residence time within the treatment chamber, enhancing pollutant settling
- Delivered to site pre-assembled and ready for installation

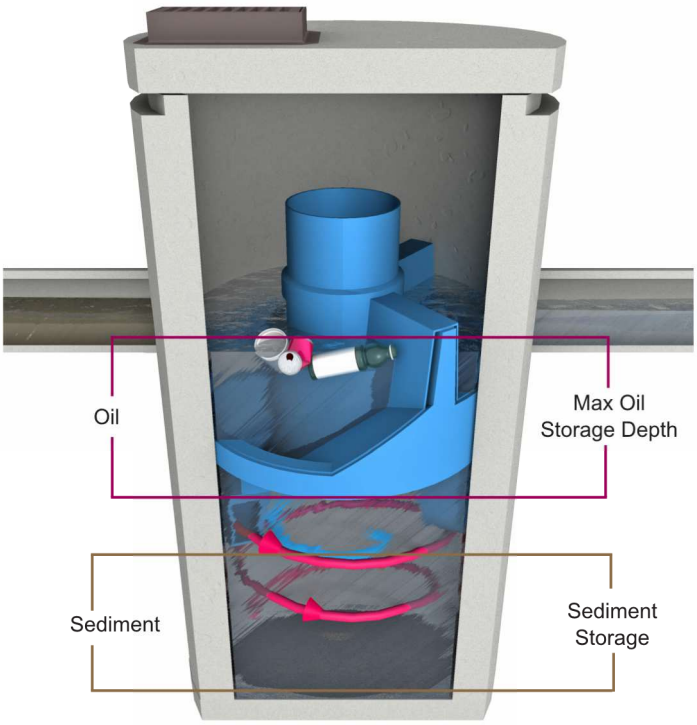

Fig.1 Pollutant storage volumes in the First Defense®.

II. Model Sizes & Configurations

The First Defense® inlet and internal bypass arrangements are available in several model sizes and configurations. The components have modified geometries allowing greater design flexibility to accommodate various site constraints.

All First Defense® models include the internal components that are designed to remove and retain total suspended solids (TSS), gross solids, floatable trash and hydrocarbons (Fig.2). First Defense® model sizes (diameter) are shown in Table 1.

III. Maintenance

First Defense® Components

1. **Built-In Bypass**
2. **Inlet Pipe**
3. **Inlet Chute**
4. **Floatables Draw-off Port**
5. **Outlet Pipe**
6. **Floatables Storage**
7. **Sediment Storage**
8. **Inlet Grate or Cover**

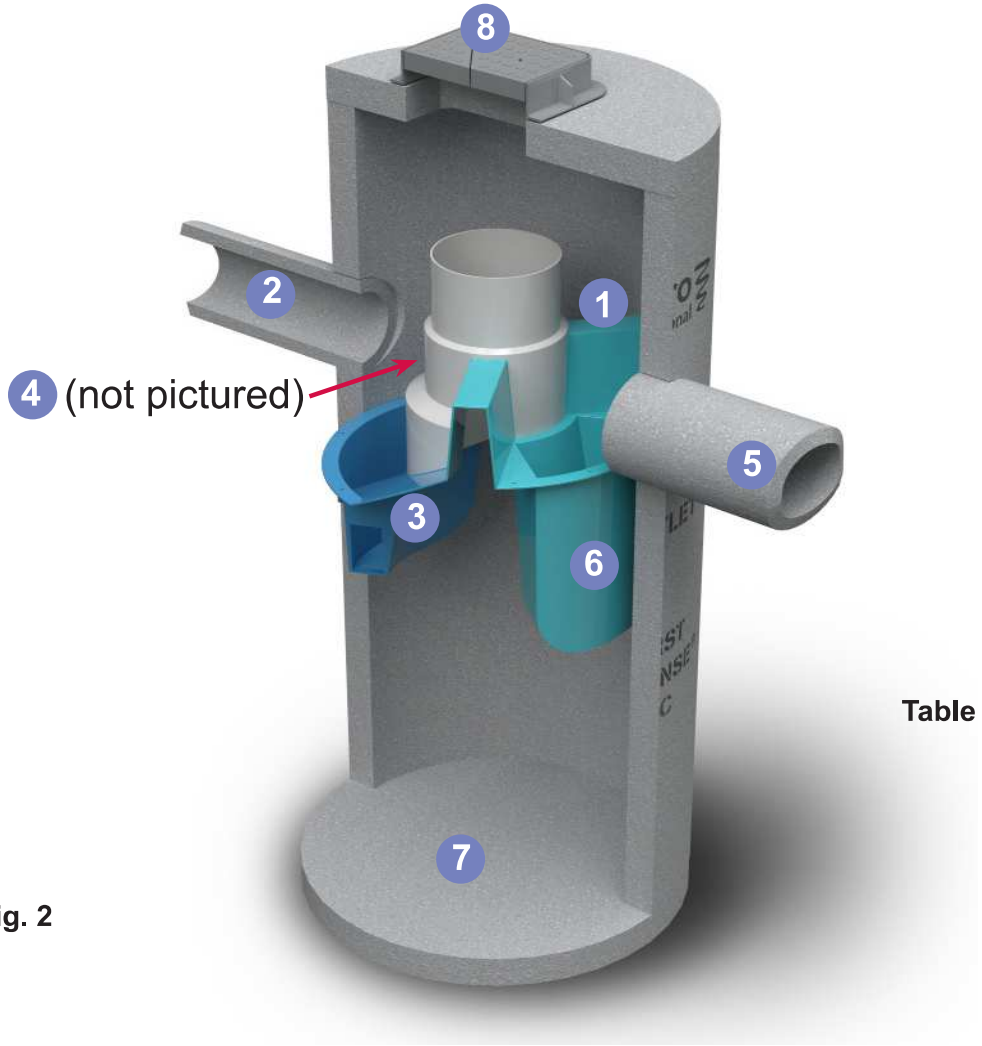

Fig. 2

Table 1

First Defense® Model Sizes
(ft / m) diameter
3 / 0.9
4 / 1.2
5 / 1.5
6 / 1.8
7 / 2.1
8 / 2.4
10 / 3.0

Overview

The First Defense® protects the environment by removing a wide range of pollutants from stormwater runoff. Periodic removal of these captured pollutants is essential to the continuous, long-term functioning of the First Defense®. The First Defense® will capture and retain sediment and oil until the sediment and oil storage volumes are full to capacity. When sediment and oil storage capacities are reached, the First Defense® will no longer be able to store removed sediment and oil.

The First Defense® allows for easy and safe inspection, monitoring and clean-out procedures. A commercially or municipally owned sump-vac is used to remove captured sediment and floatables. Access ports are located in the top of the manhole.

Maintenance events may include Inspection, Oil & Floatables Removal, and Sediment Removal. Maintenance events do not require entry into the First Defense®, nor do they require the internal components of the First Defense® to be removed. In the case of inspection and floatables removal, a vactor truck is not required. However, a vactor truck is required if the maintenance event is to include oil removal and/or sediment removal.

Maintenance Equipment Considerations

The internal components of the First Defense® have a centrally located circular shaft through which the sediment storage sump can be accessed with a sump vac hose. The open diameter of this access shaft is 15 inches in diameter (Fig.3). Therefore, the nozzle fitting of any vactor hose used for maintenance should be less than 15 inches in diameter.

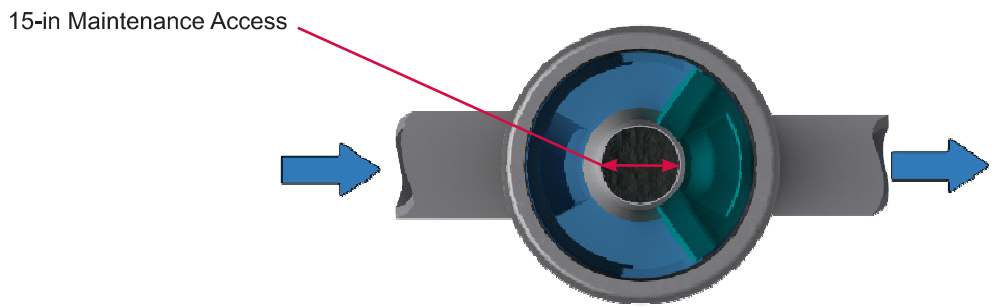

Fig.3 The central opening to the sump of the First Defense®is 15 inches in diameter.

Determining Your Maintenance Schedule

The frequency of clean out is determined in the field after installation. During the first year of operation, the unit should be inspected every six months to determine the rate of sediment and floatables accumulation. A simple probe such as a Sludge-Judge® can be used to determine the level of accumulated solids stored in the sump. This information can be recorded in the maintenance log (see page 9) to establish a routine maintenance schedule.

The vactor procedure, including both sediment and oil / flotables removal, for First Defense® typically takes less than 30 minutes and removes a combined water/oil volume of about 765 gallons.

Inspection Procedures

1. Set up any necessary safety equipment around the access port or grate of the First Defense® as stipulated by local ordinances. Safety equipment should notify passing pedestrian and road traffic that work is being done.

2. Remove the grate or lid to the manhole.

3. Without entering the vessel, look down into the chamber to inspect the inside. Make note of any irregularities. Fig.4 shows the standing water level that should be observed.

4. Without entering the vessel, use the pole with the skimmer net to remove floatables and loose debris from the components and water surface.

5. Using a sediment probe such as a Sludge Judge®, measure the depth of sediment that has collected in the sump of the vessel.

6. On the Maintenance Log (see page 9), record the date, unit location, estimated volume of floatables and gross debris removed, and the depth of sediment measured. Also note any apparent irregularities such as damaged components or blockages.

7. Securely replace the grate or lid.

8. Take down safety equipment.

9. Notify Hydro International of any irregularities noted during inspection.

Floatables and Sediment Clean Out

Floatables clean out is typically done in conjunction with sediment removal. A commercially or municipally owned sump-vac is used to remove captured sediment and floatables (Fig.4).

Floatables and loose debris can also be netted with a skimmer and pole. The access port located at the top of the manhole provides unobstructed access for a vactor hose to be lowered to the base of the sump.

Scheduling

- Floatables and sump clean out are typically conducted once a year during any season.

- Floatables and sump clean out should occur as soon as possible following a spill in the contributing drainage area.

Fig.4 Floatables are removed with a vactor hose

Recommended Equipment

- Safety Equipment (traffic cones, etc)

- Crow bar or other tool to remove grate or lid

- Pole with skimmer or net (if only floatables are being removed)

- Sediment probe (such as a Sludge Judge®)

- Vactor truck (flexible hose recommended)

- First Defense® Maintenance Log

Floatables and Sediment Clean Out Procedures

1. Set up any necessary safety equipment around the access port or grate of the First Defense® as stipulated by local ordinances. Safety equipment should notify passing pedestrian and road traffic that work is being done.

2. Remove the grate or lid to the manhole.

3. Without entering the vessel, look down into the chamber to inspect the inside. Make note of any irregularities.

4. Remove oil and floatables stored on the surface of the water with the vactor hose or with the skimmer or net

5. Using a sediment probe such as a Sludge Judge®, measure the depth of sediment that has collected in the sump of the vessel and record it in the Maintenance Log (page 9).

6. Once all floatables have been removed, drop the vactor hose to the base of the sump. Vactor out the sediment and gross debris off the sump floor

7. Retract the vactor hose from the vessel.

8. On the Maintenance Log provided by Hydro International, record the date, unit location, estimated volume of floatables and gross debris removed, and the depth of sediment measured. Also note any apparent irregularities such as damaged components, blockages, or irregularly high or low water levels.

9. Securely replace the grate or lid.

Maintenance at a Glance

Inspection	- Regularly during first year of installation - Every 6 months after the first year of installation
Oil and Floatables Removal	- Once per year, with sediment removal - Following a spill in the drainage area
Sediment Removal	- Once per year or as needed - Following a spill in the drainage area
NOTE: For most clean outs the entire volume of liquid does not need to be removed from the manhole. Only remove the first few inches of oils and floatables from the water surface to reduce the total volume of liquid removed during a clean out.	

First Defense® Installation Log

HYDRO INTERNATIONAL REFERENCE NUMBER:	
SITE NAME:	
SITE LOCATION:	
OWNER:	CONTRACTOR:
CONTACT NAME:	CONTACT NAME:
COMPANY NAME:	COMPANY NAME:
ADDRESS:	ADDRESS:
TELEPHONE:	TELEPHONE:
FAX:	FAX:

INSTALLATION DATE: / /

MODEL SIZE (CIRCLE ONE): [3-FT] [4-FT] [5-FT] [6-FT] [7-FT] [8-FT] [10-FT]

INLET (CIRCLE ALL THAT APPLY): GRATED INLET (CATCH BASIN) INLET PIPE (FLOW THROUGH)

Hydro International (Stormwater), 94 Hutchins Drive, Portland ME 04102
Tel: (207) 756-6200 Fax: (207) 756-6212 Web: www.hydro-int.com

First Defense® Inspection and Maintenance Log

Date	Initials	Depth of Floatables and Oils	Sediment Depth Measured	Volume of Sediment Removed	Site Activity and Comments

Hydro International (Stormwater), 94 Hutchins Drive, Portland ME 04102
Tel: (207) 756-6200 Fax: (207) 756-6212 Web: www.hydro-int.com

Hydro International (Stormwater), 94 Hutchins Drive, Portland ME 04102
Tel: (207) 756-6200 Fax: (207) 756-6212 Web: www.hydro-int.com

Hydro International®

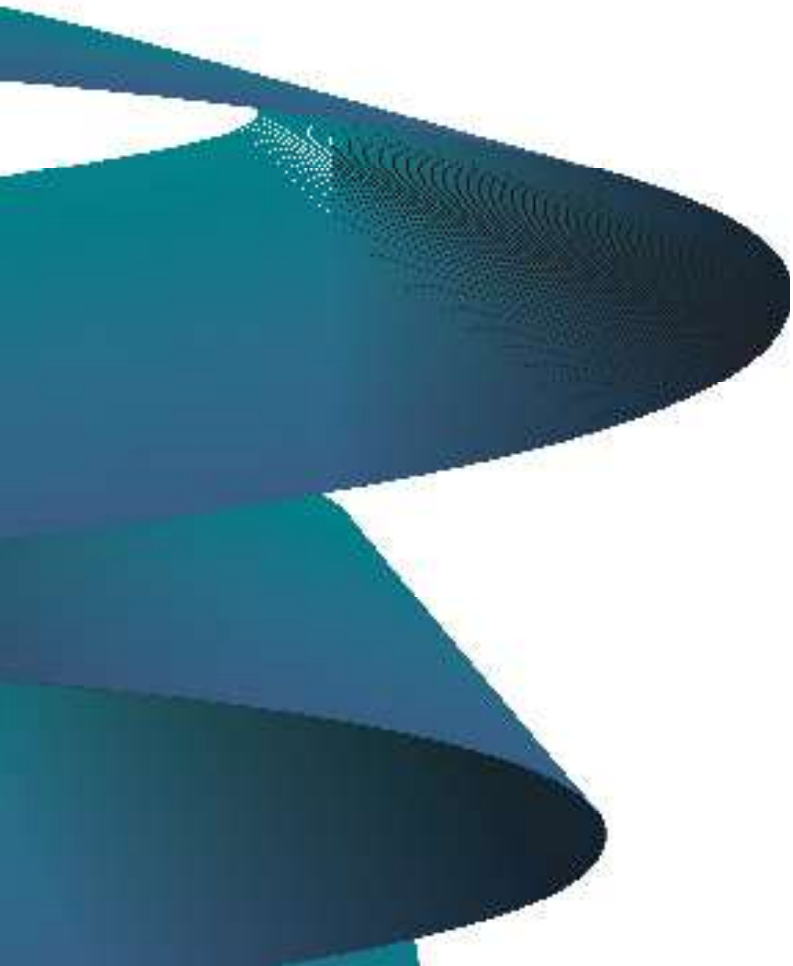

Stormwater Solutions

94 Hutchins Drive
Portland, ME 04102

Tel: (207) 756-6200
Fax: (207) 756-6212
stormwaterinquiry@hydro-int.com

www.hydro-int.com

Turning Water Around...®

FD_O+M_K_2105